Basic Electronics Engineering Unit 2

VPKBIET Baramati

Bipolar Junction Transistor (BJT)

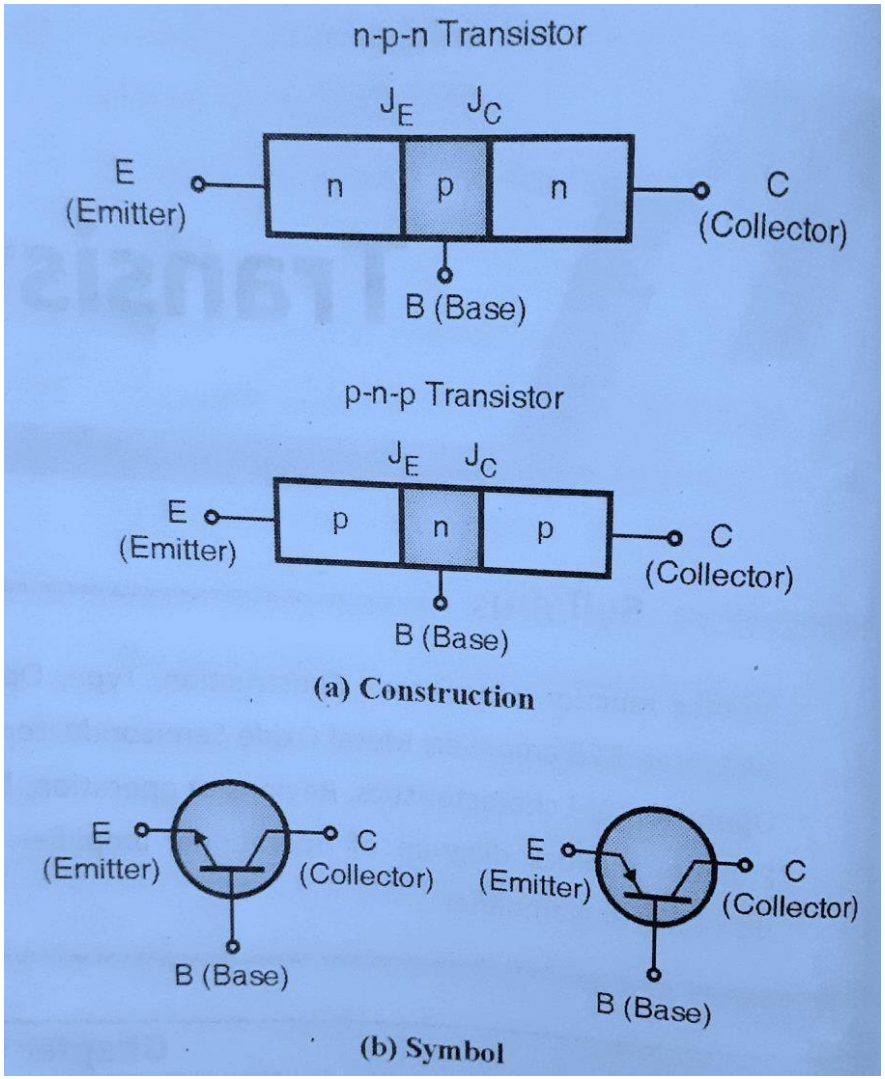

- Transistor has 3 terminals - collector, base and emitter.
- There are two types of BJTs – NPN and PNP transistor
- NPN transistor is formed by sandwiching a thin P type semiconductor between two N type semiconductors whereas PNP transistor is formed by sandwiching a thin N type semiconductor between two P type semiconductors
- Base Is a thin and lightly doped layer whereas collector and emitter are much wider than base and heavily doped
- Transistor has two p-n junctions namely BE (base to emitter) junction and CB (collector to base) junction.
- Symbols are shown in figure b. The arrow is placed on the emitter terminal and the arrow direction indicates the direction of conventional

Transistor Biasing and Regions of Operation

Sr. No.	Region of operation	Base Emitter junction	Collector Base junction	Application
1	Cut-off Region	Reverse Bias	Reverse Bias	Open Switch
2	Forward Active Region	Forward Bias	Reverse Bias	Amplifier
3	Saturation Region	Forward Bias	Forward Bias	Closed Switch

x'sistor char & parameters

Two imp. parameters β_{DC} (dc current gain)

α_{DC}

$h_{FE} = \beta_{DC} = \frac{I_C}{I_B}$ ratio of dc collector ct I_C to the dc base current I_B

(current gain) of x'sistor

Typical values of β_{dc} : 20 to 200 or higher

↓ usually designated as an eq. h parameter h_{FE} on data sheet

$\alpha_{DC} = \frac{I_C}{I_E}$ ration of dc collector ct to dc emitter current I_E

↓

less used parameter than beta in x'sistor ckt

0.95 to 0.99 or greater < 1 as I_C is less than I_E by the amount of I_B.

DC Load Line

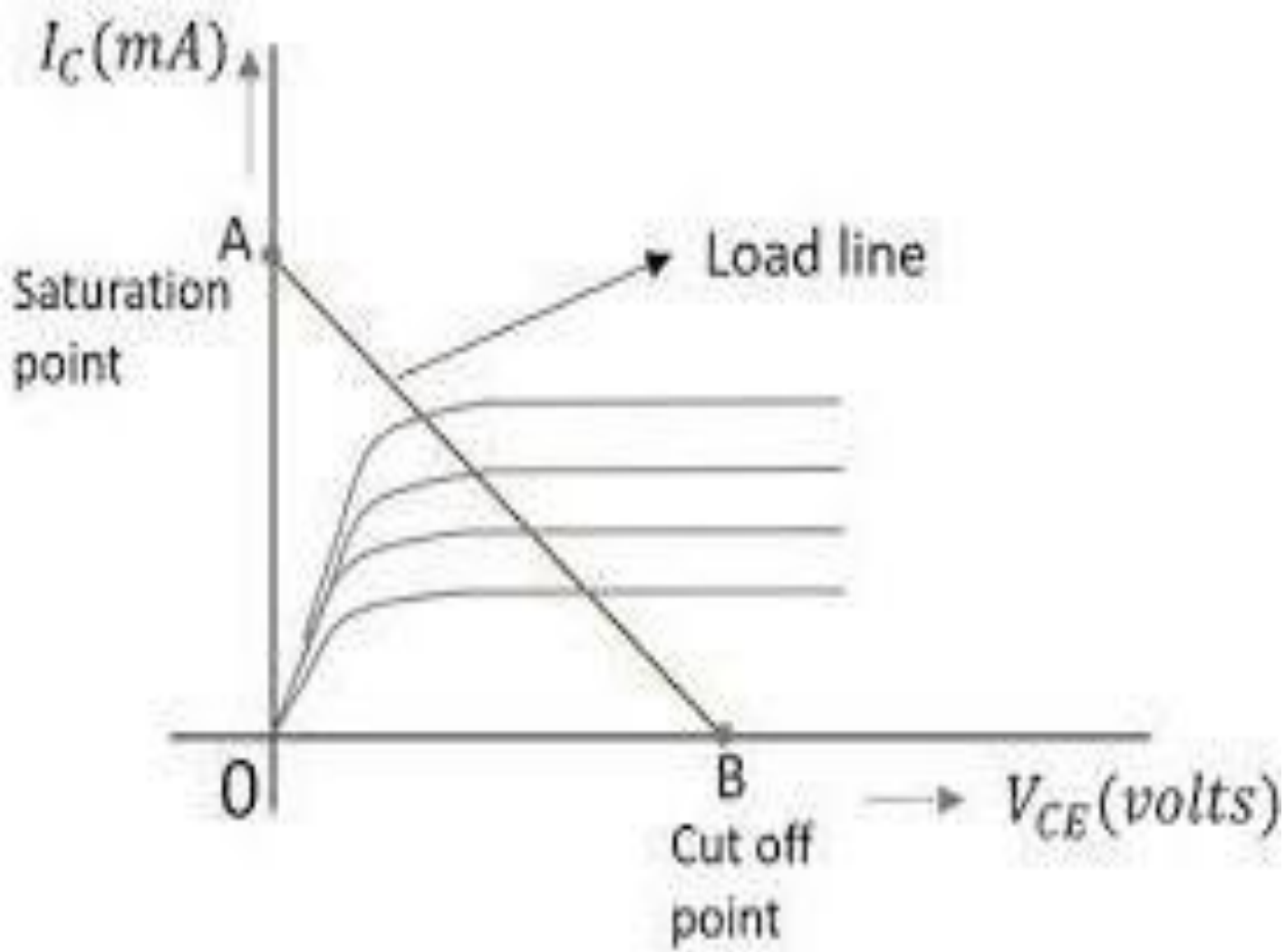

Operation of NPN transistor (In Active Region as Amplifier)

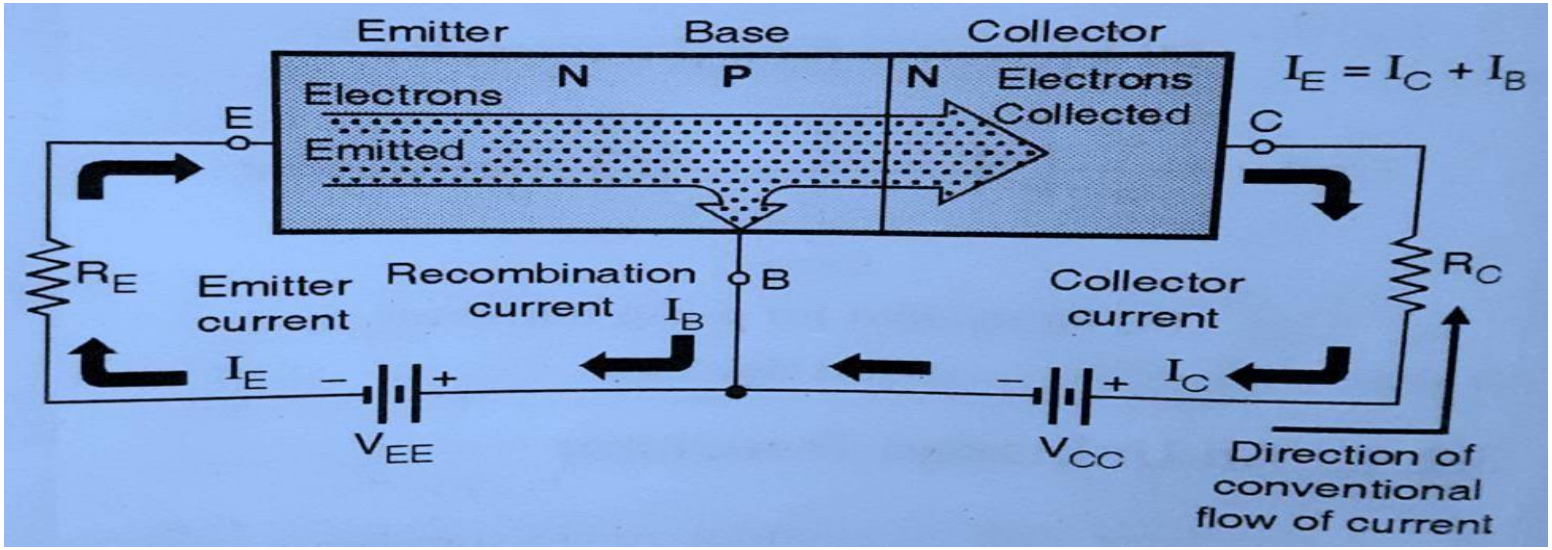

Working of NPN Transistor

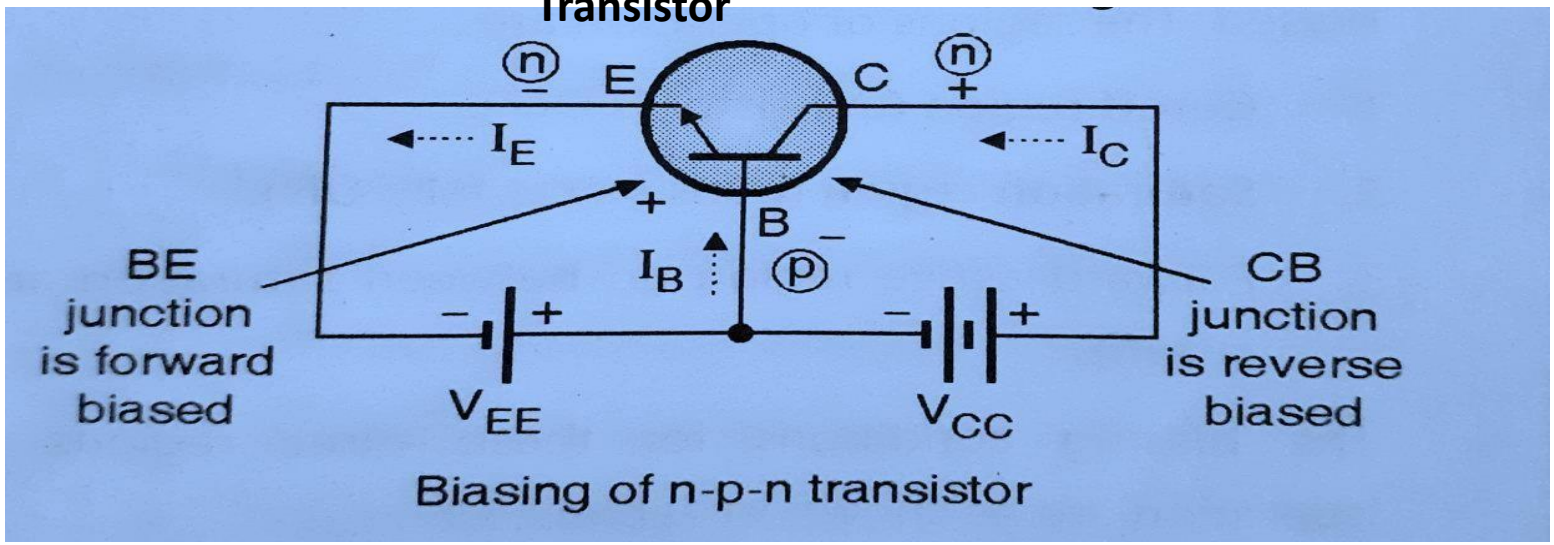

Biasing of NPN Transistor

- The NPN transistor is biased to operate in the forward active region of operation.
- The forward bias at the BE junction reduces the barrier potential and causes the electrons to flow from N-type emitter to P-type base.
- These electrons recombine with holes and flow out of the base terminal. As the base region is very thin and lightly doped, there are very few holes available in the base region for recombination. Hence about 2% electrons will flow out of base due to recombination.
- The remaining 98% electrons cross the reverse biased collector junction to constitute the collector current. They cross the collector region and are collected by the supply Vcc.
- The emitter current is equal to sum of collector and base currents.

$$I_E = I_C + I_B$$

- As I_B is very small compared to I_C we can assume collector current to be nearly equal to the emitter current.

Common Emitter (CE) amplifier

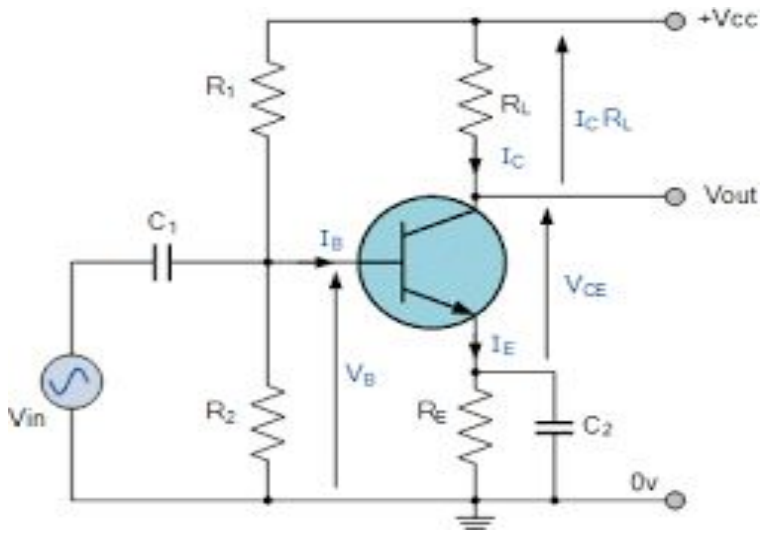

Figure 1
CE amplifier Circuit using NPN transistor

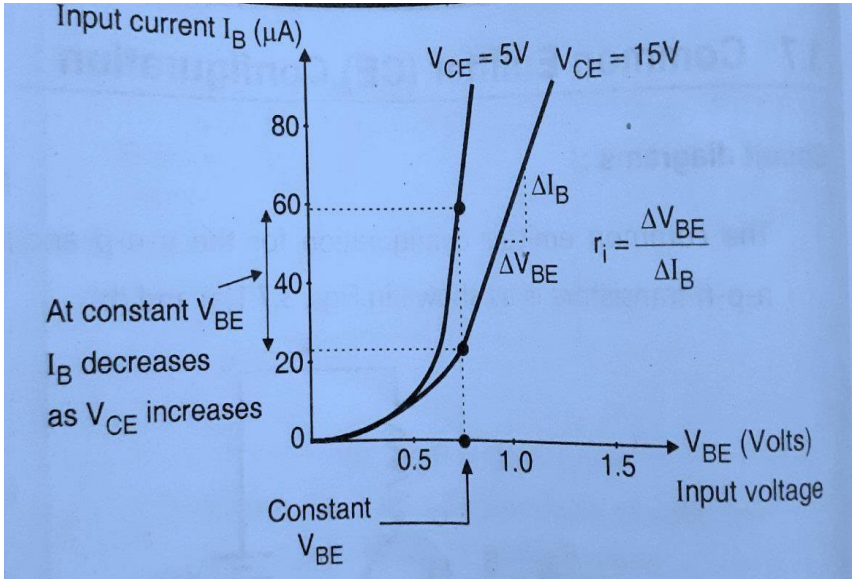

Figure 2:Input Characteristics

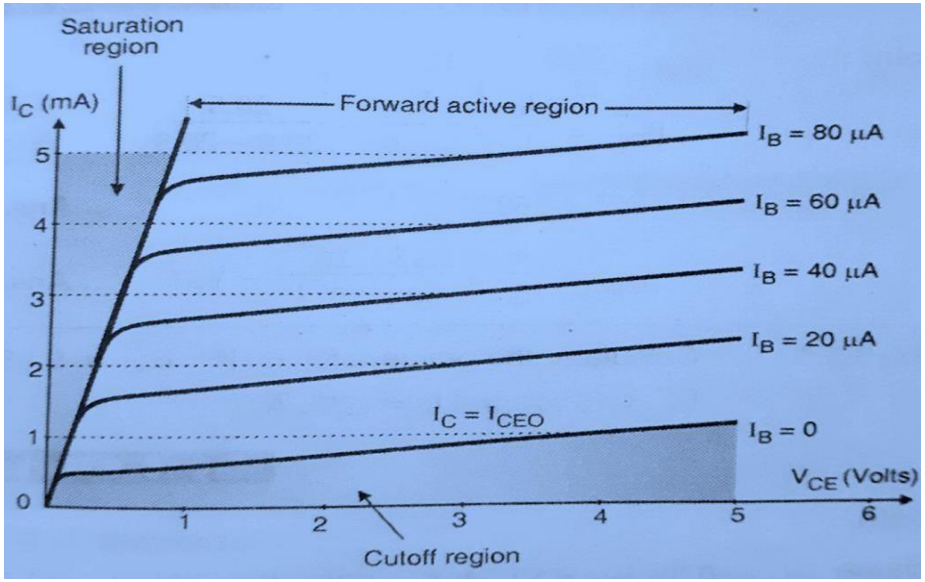

Figure 3:Output Characteristics

- The common emitter amplifier configuration for NPN transistor is shown in Figure1. In order to operate the transistor in its active region, the base-emitter (BE) junction is forward biased and the collector base (CB) junction is reverse biased.
- Emitter acts as common terminal between input and output. The input is applied between base and emitter. Hence, V_{BE} is the input voltage and I_B is the input current.
- The output is taken between collector and emitter. Therefore, V_{CE} is the output voltage and I_C is the output current.
- Current Gain β of CE configuration is defined as the ratio of output current I_C to its input current I_B.

$$\beta = \frac{I_C}{I_B}$$

Input Characteristics (Figure 2):

- Input characteristics is graph of input current I_B versus input voltage V_{BE} at a constant output voltage V_{CE}
- Input characteristics is similar to forward characteristics of p-n junction diode as BE junction is forward biased. Base current I_B increases slightly as the BE voltage V_{BE} crosses cut in voltage of BE junction.
- At constant V_{BE}, I_B decreases as V_{CE} increases.

Output Characteristics(Figure 3)

Output characteristics is the graph of output current I_C versus output voltage V_{CE} for various values of input current I_B.

- There are three regions of operation namely cutoff region, active region and saturation region

1. **Cut-off Region:** Both BE and CB junctions are reverse biased to operate transistor in cut-off region. The base current $I_B = 0$ and the collector current is equal to reverse leakage current I_{CEO}. The region below $I_B = 0$ is cutoff region.
2. **Active Region:** BE junction is forward biased and CB junction is reverse biased to operate transistor in active region. At a constant value of I_B, I_C increases slightly with increase in voltage V_{CE}. However, I_C is largely dependent on I_B since I_C increases rapidly with increase in I_B.
3. **Saturation Region:** Both BE and CB junctions are forward biased to operate transistor in saturation region. The CB junction can be forward biased if and only if V_{CE} drops down to 0.2 V because then $V_{BE} = 0.7V$ will forward bias the CB junction. I_C increases rapidly with increase in V_{CE} and independent of I_B.
   Therefore in saturation region transistor is considered to be a resistor of very small value (almost closed switch).

Application of Transistor as a Switch

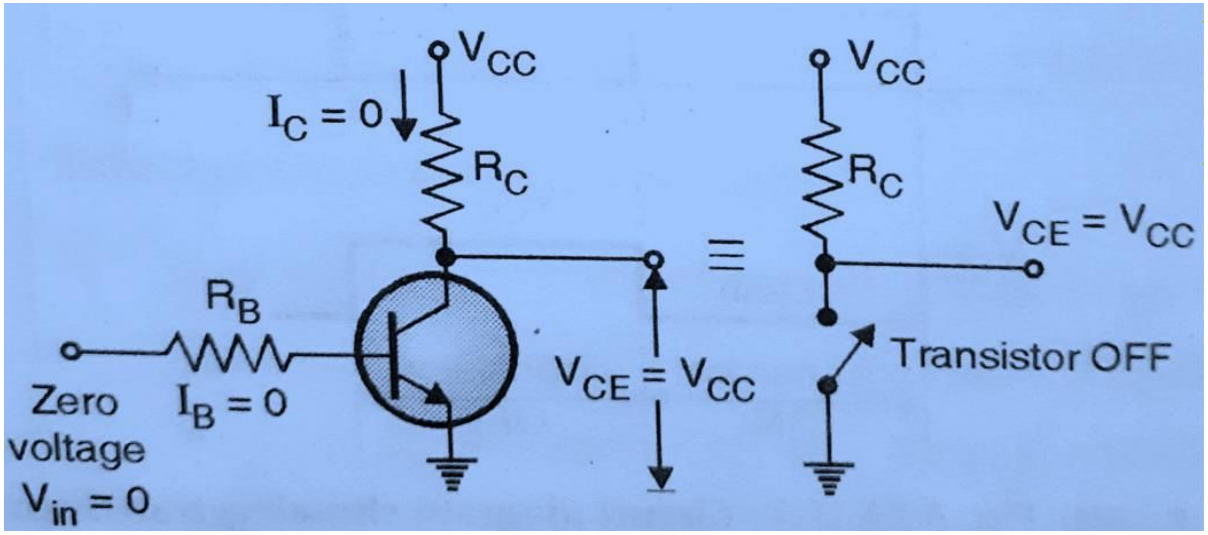

Figure 1:Transistor as open Switch in Cutoff Region

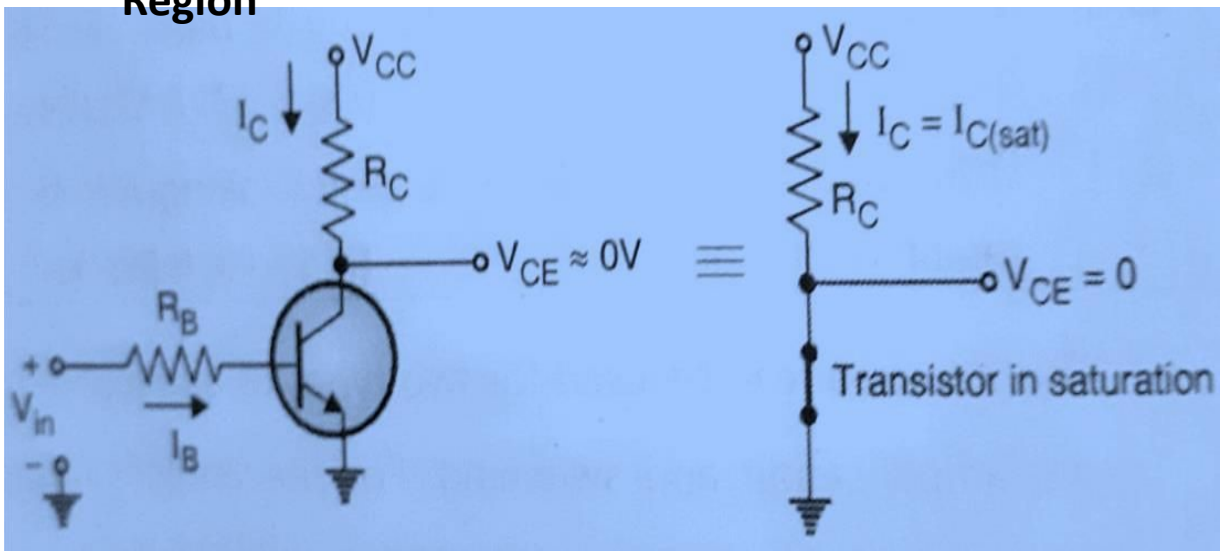

Figure 2:Transistor as closed Switch in Saturation Region

- **Open Switch (Cut-off Region):**
  - Both BE and CB junctions are reverse biased to operate transistor as open switch in cut-off region.
  - The base current $I_B = 0$ and the collector current is equal to reverse leakage current I_{CEO}. The region below $I_B = 0$ is cutoff region.
  - The voltage drop across transistor is V_{CE} is almost equal to V_{CC}

- **Closed Switch (Saturation Region):**
  - Both BE and CB junctions are forward biased to operate transistor as closed switch in saturation region.
  - The CB junction can be forward biased if and only if V_{CE} drops down to 0.2 V because then $V_{BE} = 0.7V$ will forward bias the CB junction.
  - I_C increases rapidly with increase in V_{CE} and independent of I_B. Therefore in saturation region transistor is considered to be a resistor of

    very small value (almost closed switch).
  - As transistor acts as closed switch $I_C = I_{CC}$ and $V_{CE} = 0$

Classification

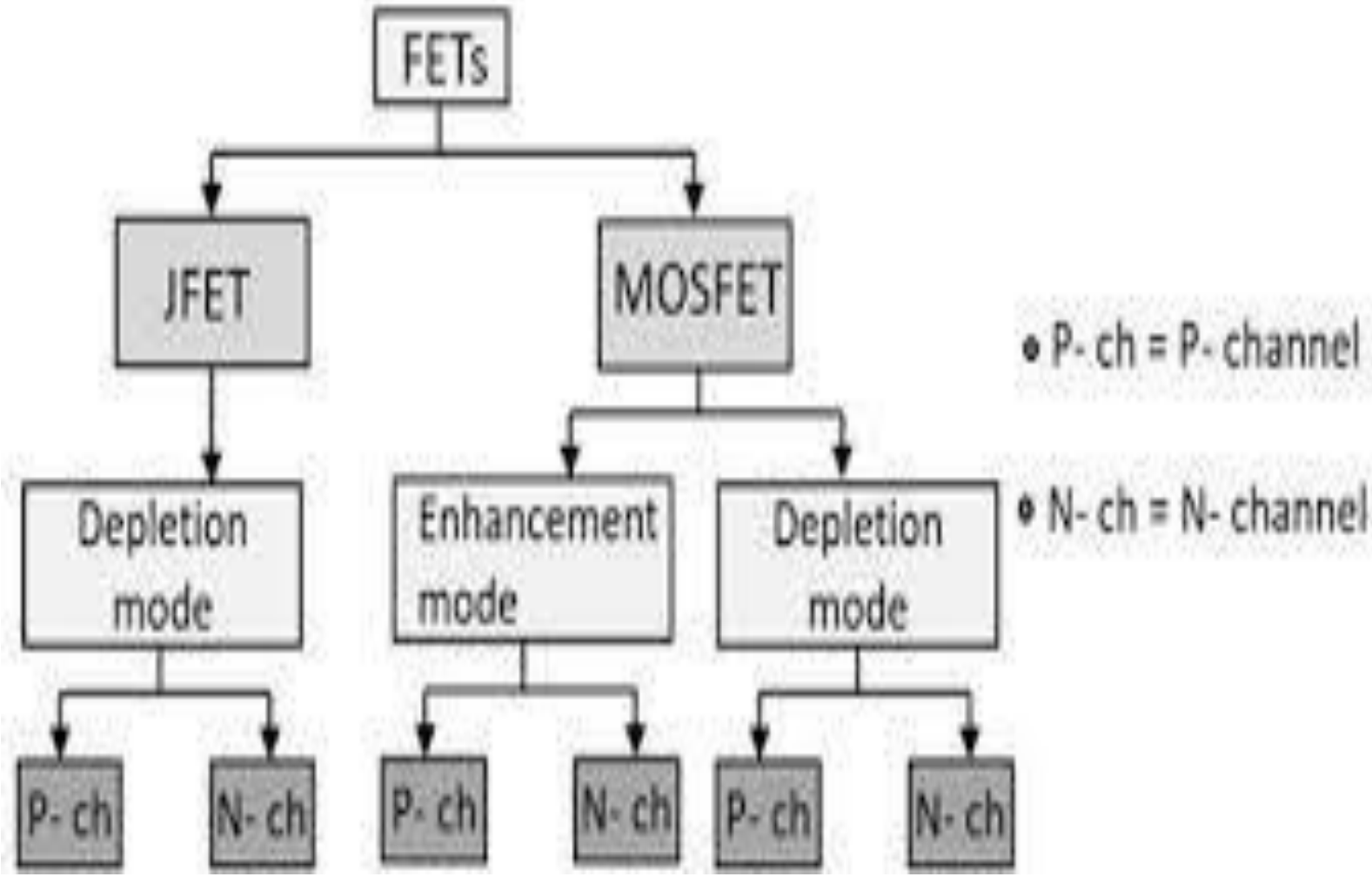

FET symbol

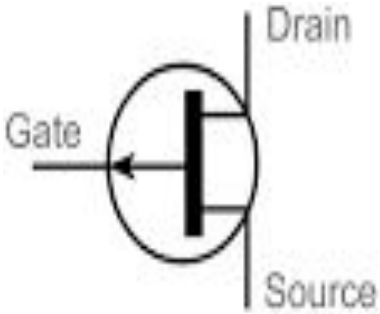

P-Channel

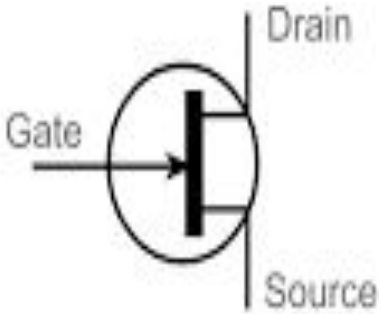

N-Channel

BJT
(bipolar junction transistor)

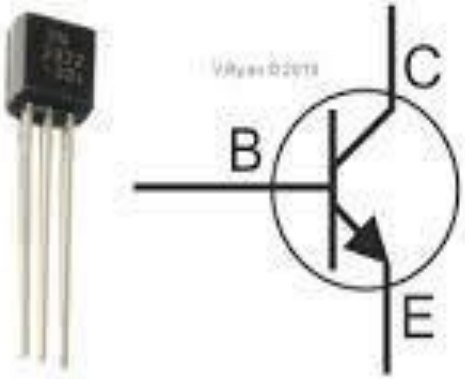

FET
(Field-Effect Transistors)

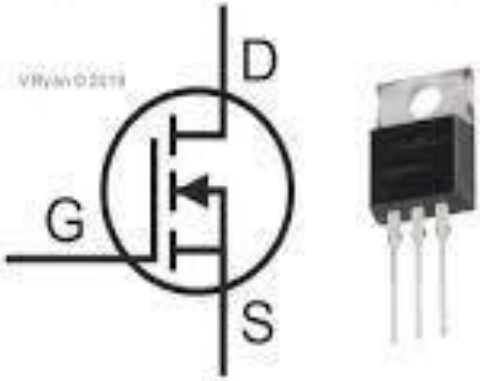

Construction and Working of N-type EMOSFET (Enhancement Metal oxide Semiconductor Field Effect Transistor)

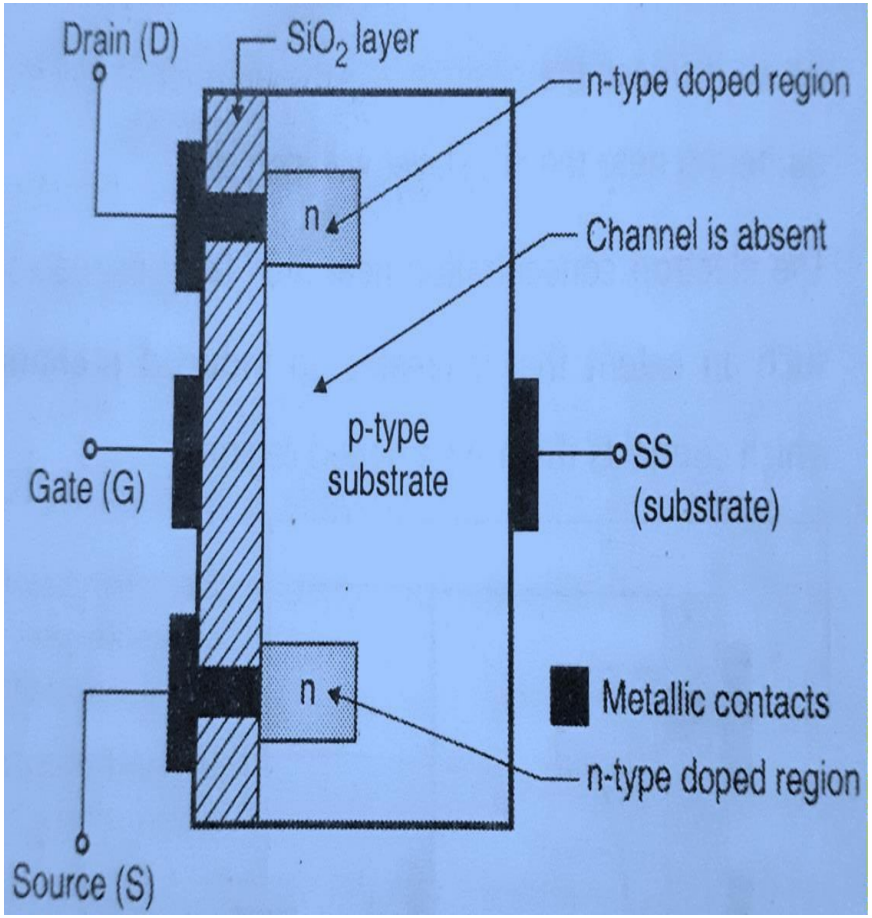

Construction:

- A slab of P-type semiconductor is used as substrate
- The drain and source terminals are connected to the N-type doped regions trough metallic contacts
- The insulating SiO_2 layer is present which isolates gate terminal from the substrate

Working:

1. **Operation with $V_{GS} = 0\ v$ and V_{DS} is positive:**

- If $V_{GS} = 0\ v$ and V_{DS} is positive, zero drain current ($I_D = 0$)will result due to absence of path/channel between source and drain.

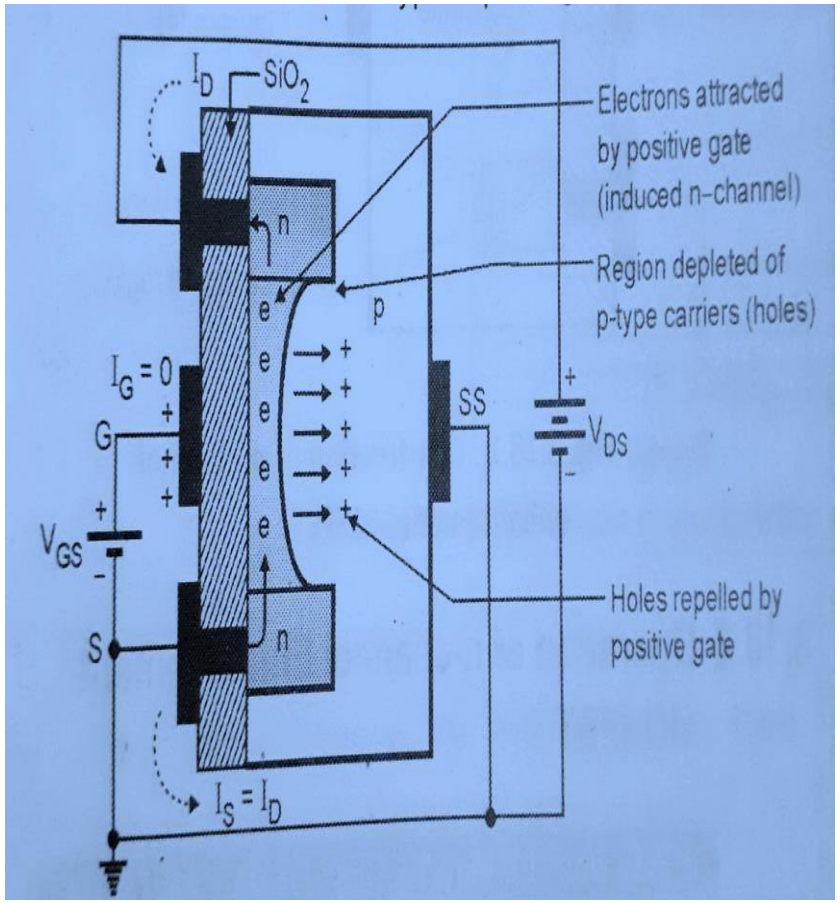

2. Operation when V_{GS} is positive and V_{DS} is positive:

- The positive potential at the gate terminal will repel the holes present in the p-type substrate as shown in Figure
- This results in creation of depletion region near SiO_2 layer
- But the minority carriers i.e. electrons in the P-type substrate will be attracted towards the positive gate and gather near the surface of SiO_2 as shown in Figure
- As we increase the positive V_{GS} the electron concentration increases to create
  an induced n-channel which connects source and drain.
- The drain current then starts flowing through this induced channel

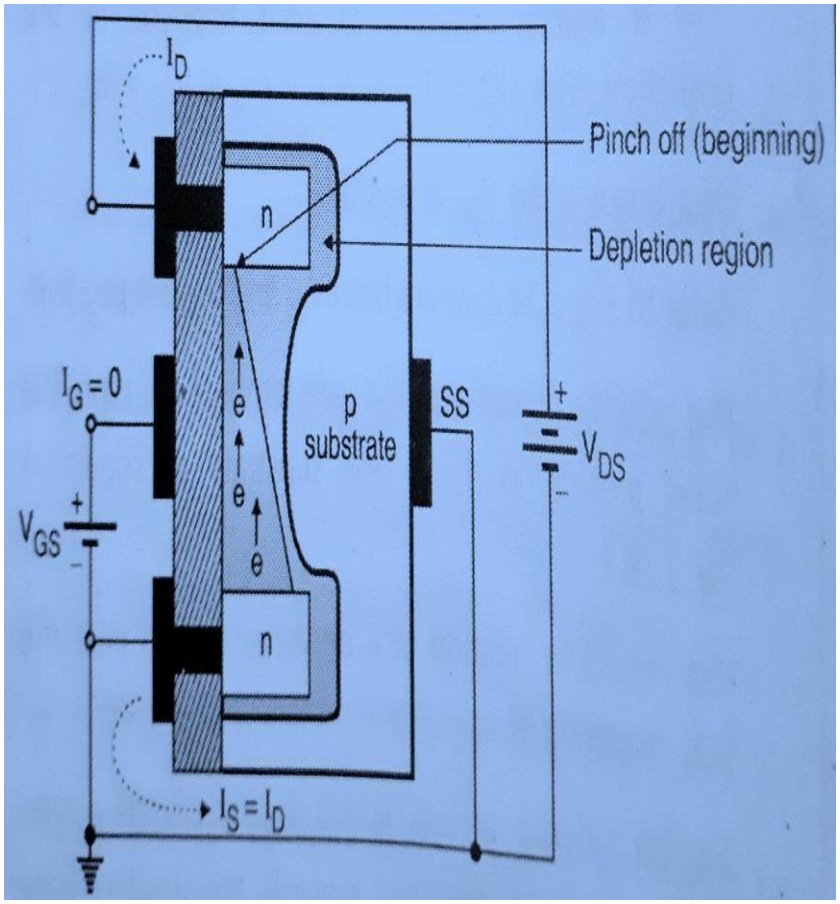

3. Operation when V_{DS} is increased by keeping V_{GS} constant :

- When V_{DS} is increased by keeping V_{GS} constant, gate terminal becomes less and less positive with respect to drain.
- So less no. of electrons are attracted towards gate and the induced channel becomes narrow as shown in Figure.
- At last the channel width will be reduced to a point of pinch off i.e. it remains constant and E-MOSFET operates in saturation region.
- E-MOSFET operates as an amplifier in saturation region

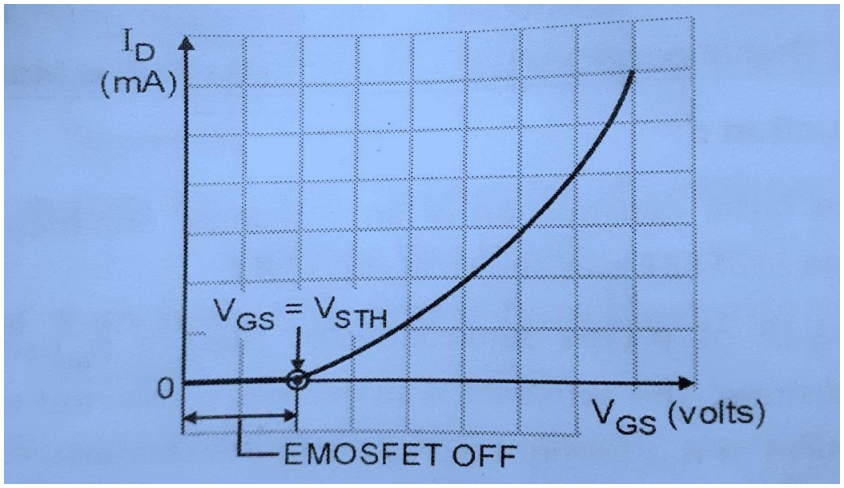

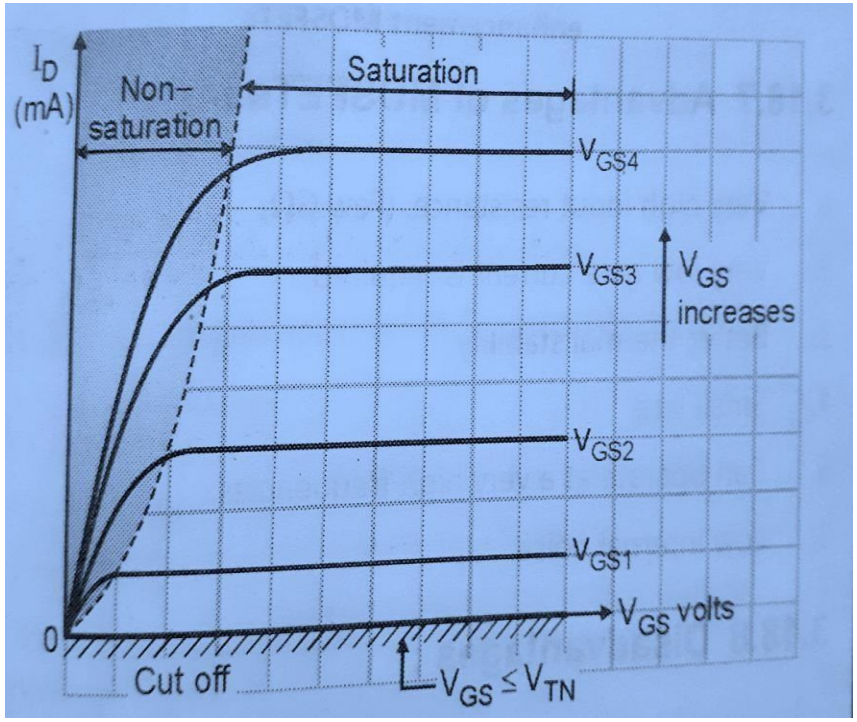

Transfer Characteristics: (I_D vs V_{GS}):

- Till $V_{GS} < V_{TH}$ i.e. till the channel is absent between source and drain there is no drain current i.e. $I_D = 0$.
- At $V_{GS} > V_{TH}$, drain current increases non- linearly with increase in V_{GS} as shown in Figure.

Drain Characteristics:

Cut-off Region:

- It corresponds to region where $c = 0$ when $V_{GS} < V_{TH}$
- E-MOSFET operates as open switch in cutoff region.

Saturation Region:

- In saturation region I_D remains constant and does not change with changes in V_{DS}
- E-MOSFET operates as an amplifier in saturation region

Ohmic Region:

- In ohmic region I_D varies with changes in V_{DS}.

Common Source Amplifier using n-type E-MOSFET

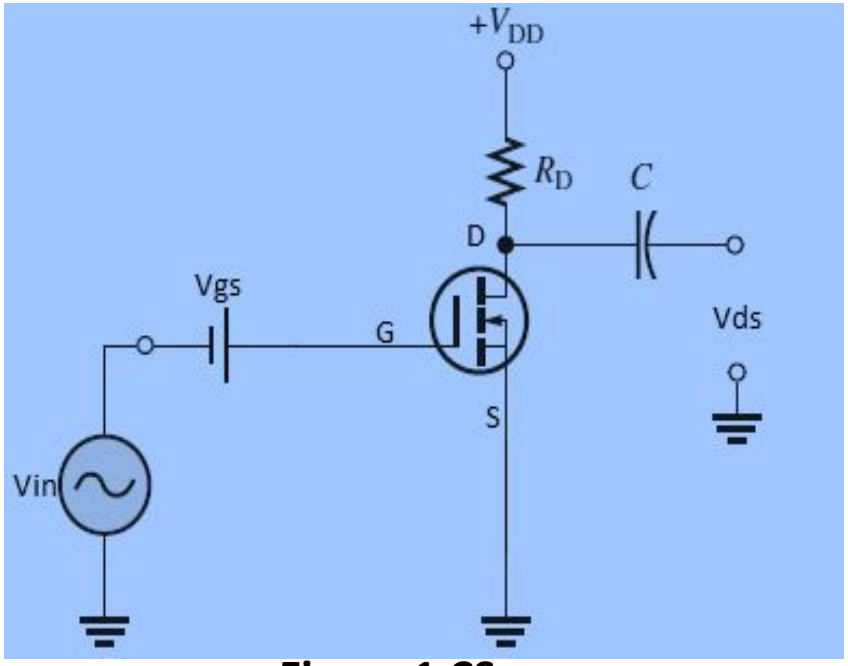

Figure 1 CS Amplifier

- Figure 1 shows common source (CS) amplifier using N-type E-MOSFET
- The source terminal is used common between gate (INPUT) and drain (OUTPUT)
- V_{GS} is positive DC gate to source voltage higher than V_{TH}. It biases the MOSFET in saturation region of its operation (as an amplifier).
- V_i is the input AC voltage to be amplified. It is applied in series with V_{GS} as shown in Figure.
- Thus V_i is superimposed on V_{GS} as shown in the waveform below and will be applied to gate.
- R_o is the load resistance, C_C is the coupling mplified output

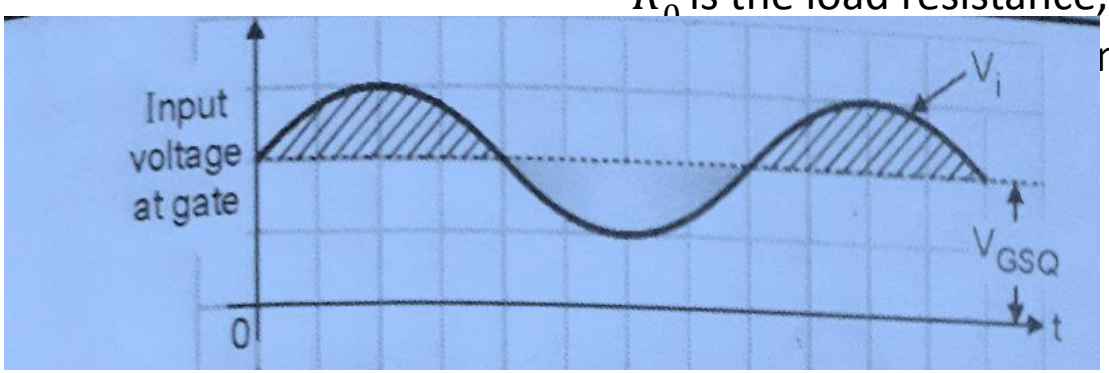

Input and Output waveforms for CS amplifier using E-MOSFET

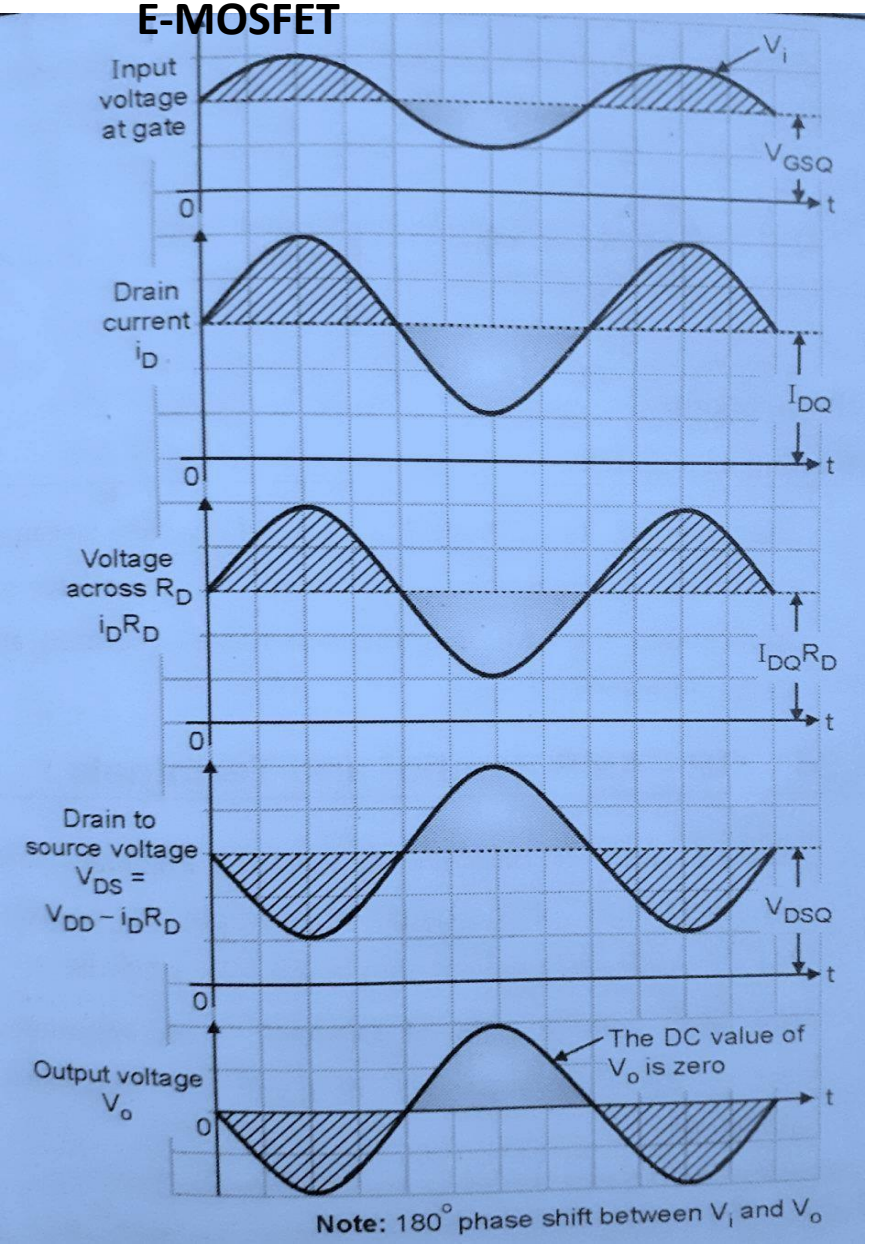

Operation:

In Positive Half cycle of V_i:

- As V_i changes sinusoidally above V_{GS}, I_D changes sinusoidally above I_{DQ} as shown in the waveform.
- Hence voltage drop $I_D R_D$ changes sinusoidally above its Q point value
- Hence V_{DS} will change sinusoidally below V_{DSQ} because $V_{DS} = V_{DD} - I_D R_D$
- Thus we get amplified but inverted version (180° out of phase) of V_0 across drain and source

In Negative Half cycle of V_i:

- As V_i changes sinusoidally below V_{GS}, I_D changes sinusoidally below I_{DQ} as shown in the waveform.
- Hence voltage drop $I_D R_D$ changes sinusoidally below its Q point value
- Hence V_{DS} will change sinusoidally above V_{DSQ} because $V_{DS} = V_{DD} - I_D R_D$
- Thus we get amplified but inverted version (180° out of phase) of V_0 across drain and source

Role of Coupling Capacitor C_C: Coupling capacitor couples AC part and blocks DC part

MOSFET Characteristics

This image cannot currently be displayed

MOSFET as a Open Switch

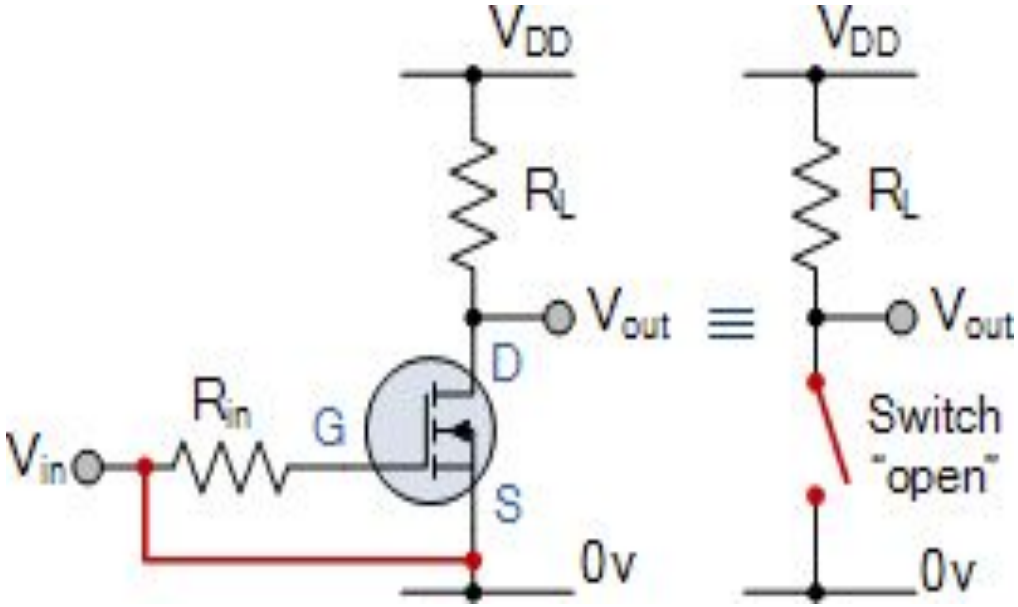

- The input and Gate are grounded (0V)
- Gate-source voltage less than threshold voltage $V_{GS} < V_{TH}$
- MOSFET is “OFF” (Cut-off region)
- No Drain current flows ($I_D = 0$ Amps)
- $V_{OUT} = V_{DS} = V_{DD} = ”1″$
- MOSFET operates as an “open switch”

MOSFET as a Closed Switch

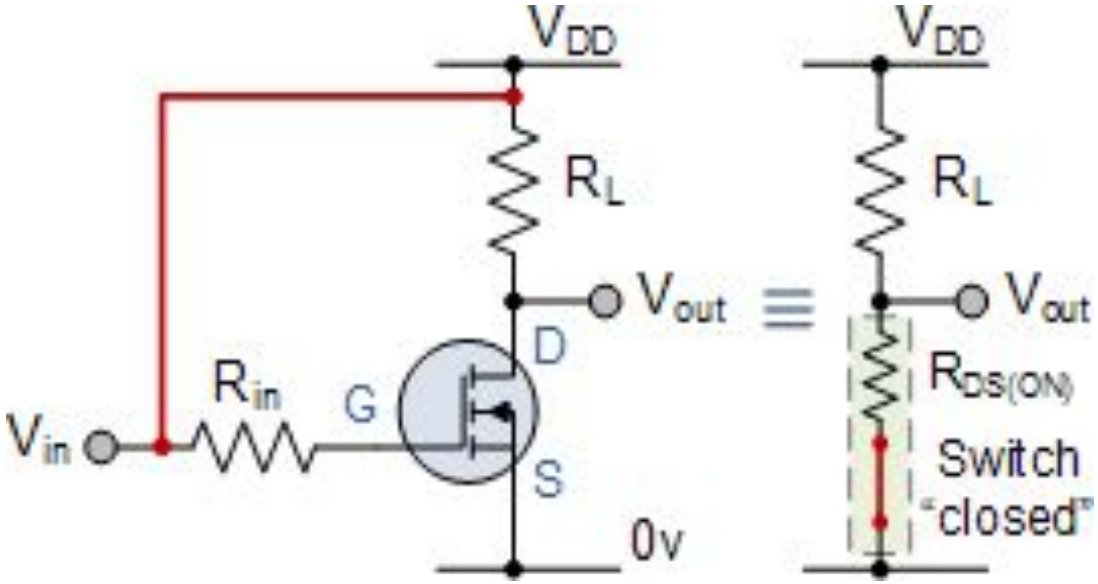

- The input and Gate are connected to V_{DD}
- Gate-source voltage is much greater than threshold voltage $V_{GS} > V_{TH}$
- MOSFET is "ON" (saturation region)
- Max Drain current flows ($I_D = V_{DD} / R_L$)
- $V_{DS} = 0V$ (ideal saturation)
- Min channel resistance $R_{DS(on)} < 0.1\Omega$
- $V_{OUT} = V_{DS} \cong 0.2V$ due to $R_{DS(on)}$
- MOSFET operates as a low resistance "closed switch"

(1) BJT stands for Bipolar Junction Transistor	**(1) MOSFET is a type of field-effect transistors. It stands for Metal Oxide Semiconductor Field Effect Transistor.**
(2) BJT is based on its types of P-N junctions connected either it can be NPN or PNP.	(2) As it is a type of FET in this the transistor can be either made of P-type or N-type semiconductor material.
(3) BJT is known as Bipolar Device.	(3) MOSFET comes under the category of Unipolar Device.
(4) BJT has three terminals collector, emitter and base.	(4) It also has three terminals known as source, drain, and gate.
(5) These are known as current control devices.	(5) These are known for its feature of voltage control.